BORDEAUX EUROPEA LIGHT 0.750



KMC
GLASS

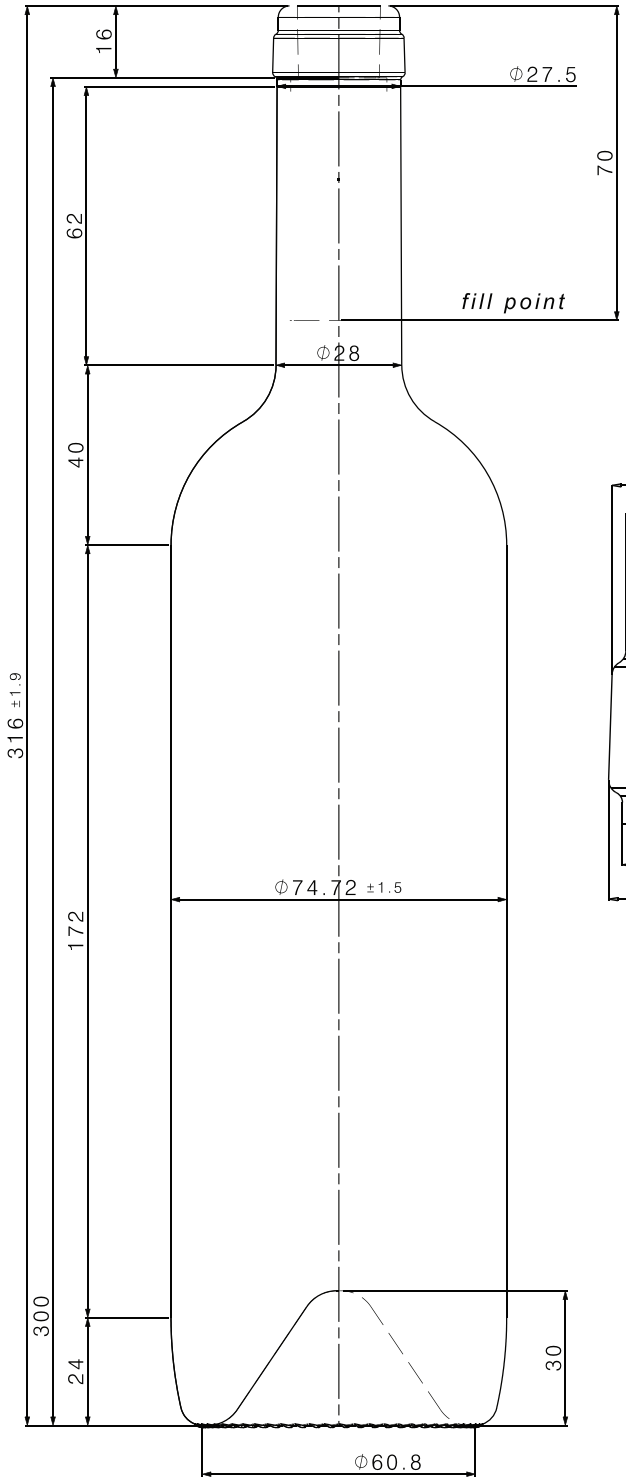

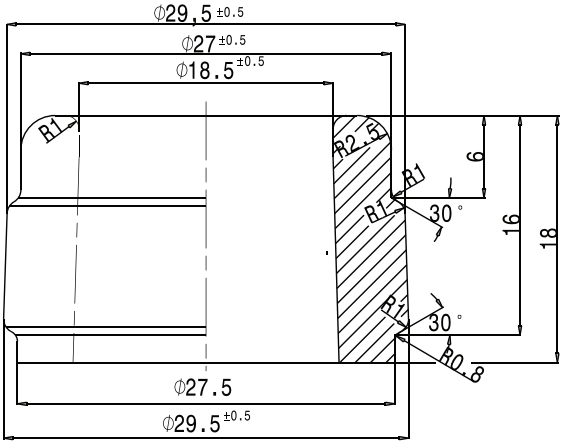

- Bordeaux Europea Light
- Filling CAP - 750 ml
- Weight - 520 g
- Height - 316±1.9 mm
- Diameter - 74.72±1.5 mm
- Entrance Bore Diameter - 18.5±0.5 mm
- Color - Olive Green

www.kmc.glass
sales@kmc.glass

KMC GLASS